OPTITEMP TFA-100 Handbook

Temperature field indicator

© KROHNE 03/2024 - 4010168001 - MA OPTITEMP TFA-100 R01 en

KROHNE

IMPRINT

All rights reserved. It is prohibited to reproduce this documentation, or any part thereof, without the prior written authorisation of KROHNE Messtechnik GmbH.

Subject to change without notice.

Copyright 2024 by
KROHNE Messtechnik GmbH - Ludwig-Krohne-Str. 5 - 47058 Duisburg (Germany)

1 Safety instructions 5

1.1 Intended use 5
1.2 Approvals and certifications 5
1.3 Safety instructions from the manufacturer 6
1.3.1 Copyright and data protection 6
1.3.2 Disclaimer 6
1.3.3 Product liability and warranty 6
1.3.4 Information concerning the documentation 7
1.3.5 Warnings and symbols used 8
1.4 Safety instructions for the operator 8

2 Device description 9

2.1 Scope of delivery 9
2.2 Product documentation and software 10
2.3 Device description 11
2.3.1 Design of temperature field indicator 11
2.3.2 Types of field housing 12
2.3.3 Cable gland and plug 13
2.3.4 Types of temperature transmitters 14
2.3.5 Display module 14
2.3.6 Pipe Clamp 16
2.4 Nameplate 17

3 Installation 18

3.1 General notes on installation 18
3.2 Storage 18
3.3 Transport 18
3.4 Proper installation 19
3.5 Opening and closing field indicator 21

4 Electrical connections 22

4.1 Safety instructions 22
4.2 Grounding 22
4.3 Ingress protection 22
4.4 Power supply 22
4.5 Connection diagram 23

5 Operation 26

5.1 Start-up 26
5.2 Normal operation 26

6 Service 27

6.1 Replacing the electronics 27
6.2 Cleaning and maintenance 27
6.3 Spare parts availability 27
6.4 Availability of services 28
6.5 Troubleshooting 28
6.6 Returning the device to the manufacturer 28
6.6.1 General information 28
6.6.2 Form (for copying) to accompany a returned device 29
6.7 Disposal 30
6.8 Disassembly and recycling of the field indicator / field housing 30

7 Technical data 34

7.1 Technical data tables 34
7.2 Dimensions 37
7.2.1 Field housing 37
7.2.2 Accessories 39

8 Notes 42

1.1 Intended use

CAUTION!
Responsibility for the use of the measurement devices with regard to suitability, intended use and corrosion resistance of the used materials against the measured fluid lies solely with the operator.

INFORMATION!
The manufacturer is not liable for any damage resulting from improper use or use for other than the intended purpose.

The temperature field indicator is used to indicate / convert the measure value to a digital value to be shown on a display for industrial applications. It can also be used with any transmitter fitting to a connection head size DIN B or as display only.

For temperature field indicator with window and display module inside, it can be installed directly in a 4-20 mA loop without need for external power supply. It contains high-contrast, 4-digit LCD display with LED backlight. More information about the display module please look into the handbook for OPTITEMP LCD-D100.

For temperature field indicators without window or display module inside, are suitable for demands when transmitters can not be installed on local measuring instruments and still need to be close to measuring point. Please look into the respective OPTITEMP transmitter handbook.

1.2 Approvals and certifications

The relevant regulations to which temperature field indicator TFA-100 complies are listed in Declaration of conformity which is downloadable from Krohne website.

The relevant regulations to which temperature transmitters complies are listed in Declaration of conformity which is downloadable from Krohne website.

For proper use of the temperature transmitters with temperature field indicator TFA-100 please look into the respective OPTITEMP temperature transmitters handbook.

1.3 Safety instructions from the manufacturer

1.3.1 Copyright and data protection

The contents of this document have been created with great care. Nevertheless, we provide no guarantee that the contents are correct, complete or up-to-date.

The contents and works in this document are subject to copyright. Contributions from third parties are identified as such. Reproduction, processing, dissemination and any type of use beyond what is permitted under copyright requires written authorisation from the respective author and/or the manufacturer.

The manufacturer tries always to observe the copyrights of others, and to draw on works created in-house or works in the public domain.

The collection of personal data (such as names, street addresses or e-mail addresses) in the manufacturer's documents is always on a voluntary basis whenever possible. Whenever feasible, it is always possible to make use of the offerings and services without providing any personal data.

We draw your attention to the fact that data transmission over the Internet (e.g. when communicating by e-mail) may involve gaps in security. It is not possible to protect such data completely against access by third parties.

We hereby expressly prohibit the use of the contact data published as part of our duty to publish an imprint for the purpose of sending us any advertising or informational materials that we have not expressly requested.

1.3.2 Disclaimer

The manufacturer will not be liable for any damage of any kind by using its product, including, but not limited to direct, indirect or incidental and consequential damages.

This disclaimer does not apply in case the manufacturer has acted on purpose or with gross negligence. In the event any applicable law does not allow such limitations on implied warranties or the exclusion of limitation of certain damages, you may, if such law applies to you, not be subject to some or all of the above disclaimer, exclusions or limitations.

Any product purchased from the manufacturer is warranted in accordance with the relevant product documentation and our Terms and Conditions of Sale.

The manufacturer reserves the right to alter the content of its documents, including this disclaimer in any way, at any time, for any reason, without prior notification, and will not be liable in any way for possible consequences of such changes.

1.3.3 Product liability and warranty

The operator shall bear responsibility for the suitability of the device for the specific purpose. The manufacturer accepts no liability for the consequences of misuse by the operator. Improper installation or operation of the devices (systems) will cause the warranty to be void. The respective "Standard Terms and Conditions" which form the basis for the sales contract shall also apply.

1.3.4 Information concerning the documentation

To prevent any injury to the user or damage to the device it is essential that you read the information in this document and observe applicable national standards, safety requirements and accident prevention regulations.

If this document is not in your native language and if you have any problems understanding the text, we advise you to contact your local office for assistance. The manufacturer cannot accept responsibility for any damage or injury caused by misunderstanding of the information in this document.

This document is provided to help you establish operating conditions, which will permit safe and efficient use of this device. Special considerations and precautions are also described in the document, which appear in the form of icons as shown below.

1.3.5 Warnings and symbols used

Safety warnings are indicated by the following symbols.

DANGER!
This warning refers to the immediate danger when working with electricity.

DANGER!
This warning refers to the immediate danger of burns caused by heat or hot surfaces.

DANGER!
This warning refers to the immediate danger when using this device in a hazardous atmosphere.

DANGER!
These warnings must be observed without fail. Even partial disregard of this warning can lead to serious health problems and even death. There is also the risk of seriously damaging the device or parts of the operator's plant.

WARNING!
Disregarding this safety warning, even if only in part, poses the risk of serious health problems. There is also the risk of damaging the device or parts of the operator's plant.

CAUTION!
Disregarding these instructions can result in damage to the device or to parts of the operator's plant.

INFORMATION!
These instructions contain important information for the handling of the device.

LEGAL NOTICE!
This note contains information on statutory directives and standards.

- HANDLING
  This symbol designates all instructions for actions to be carried out by the operator in the specified sequence.

➲ RESULT
This symbol refers to all important consequences of the previous actions.

1.4 Safety instructions for the operator

WARNING!
In general, devices from the manufacturer may only be installed, commissioned, operated and maintained by properly trained and authorized personnel.
This document is provided to help you establish operating conditions, which will permit safe and efficient use of this device.

2.1 Scope of delivery

INFORMATION!
Inspect the packaging carefully for damages or signs of rough handling. Report damage to the carrier and to the local office of the manufacturer.

INFORMATION!
Do a check of the packing list to make sure that you have all the elements given in the order.

INFORMATION!
Look at the device nameplate to ensure that the device is delivered according to your order.

The manufacturer delivers temperature field indicators with the relevant technical documentation. The following table illustrates which field indicator is related to which documentation (HB = Handbook, TT = Temperature Transmitter, LCD-D100 = Display module):

Scope of order	HB TFA-100	HB TT	HB LCD-D100
Without TT, with display	X	-	X
Without TT, without display	X	-	-
With TT, with display	X	X	X
With TT, without display	X	X	-

Table 2-1: Scope of delivery

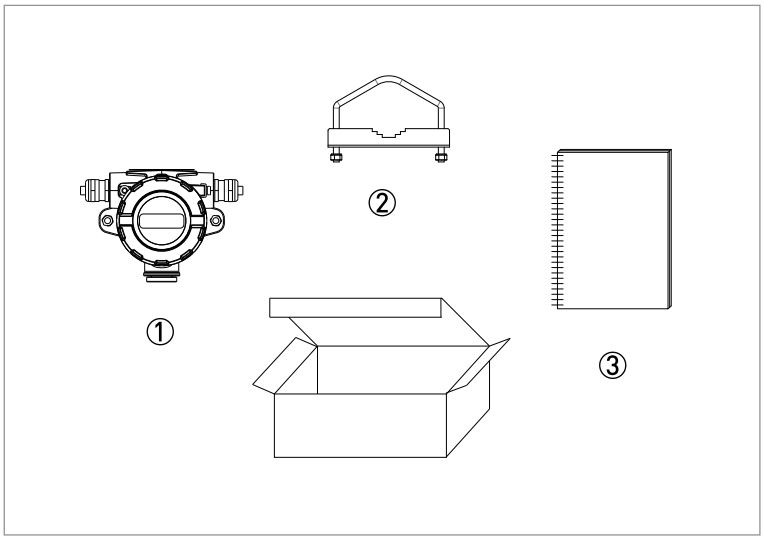

Figure 2-1: Package contents

① TFA-100
② Pipe Clamp (Optional)
③ Quick Start guide

2.2 Product documentation and software

The technical data, documentation and software related to your product is kept in an online database, the Product Information Center KROHNE (PICK). Use one of the methods that follow to find this data:

- Go to the PICK website (https://pick.krohne.com/), then enter the device serial number or order number in the PICK search bar.
- Use a mobile device to scan the Data Matrix code (AutoID) on the nameplate of your product.

The web browser will then show a page with all the data related to your product. Download the necessary data.

2.3 Device description

2.3.1 Design of temperature field indicator

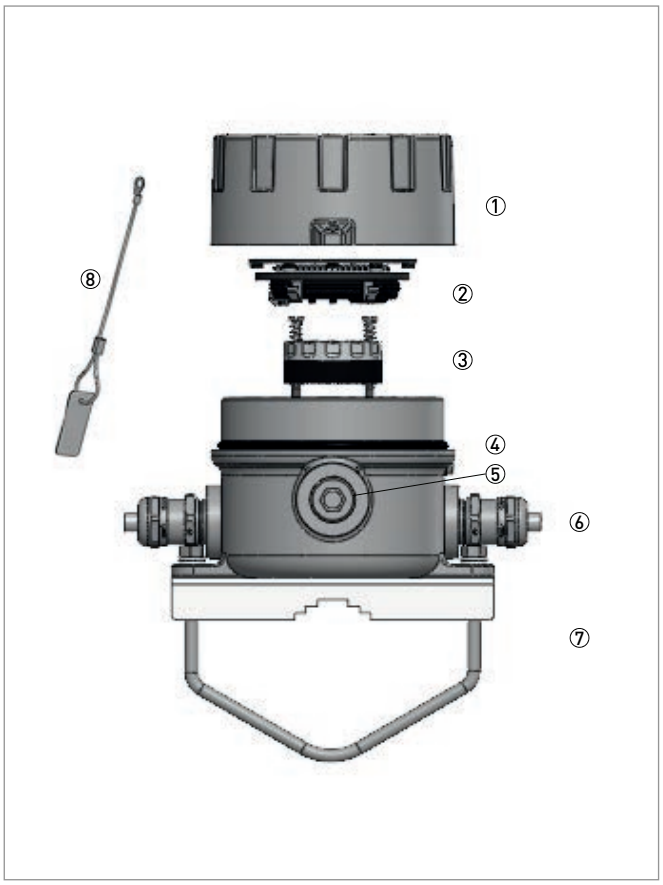

Figure 2-2: Design of temperature field indicator

① Field housing cover
② LCD-D100 display module
③ Transmitter
④ O-ring
⑤ Plug
⑥ Cable gland
⑦ 1.5"...2" pipe clamp
⑧ Stainless steel tag with wires

The temperature field indicator OPTITEMP TFA-100 is a heavy-duty instrument for installation directly on pipe or wall.

OPTITEMP TFA-100 in general consists of a field housing, window, display module, transmitter and accessories such as cable gland, plug, tag plate and 1.5"...2" pipe clamp.

2.3.2 Types of field housing

A field housing protects the display module and the temperature transmitter from environmental effects (e. g. dirt or dust). All field housings for industrial temperature measurement has have three cable entry connection threads with two different types as standard, the threads M20 x 1.5 and 1/2" NPT.

There are oil-resistant silicone rubber seals on the covers of all field housings (can be used up to +90°C / +194°F ambient temperature). The field housings are available in the following materials:

- Pressure die-cast aluminium, for most common industry environments
- Stainless steel, especially for harsh outdooor environments

TFA-100 without window, aluminium 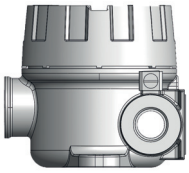	TFA-100 with window, aluminium 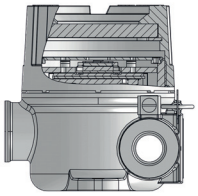
TFA-100 without window, stainless steel 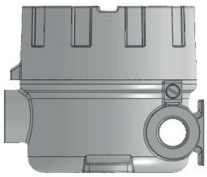	TFA-100 with window, stainless steel 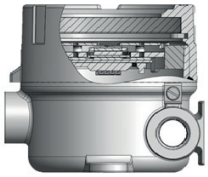

Table 2-2: Available field housings

2.3.3 Cable gland and plug

The cable entries and plugs for OPTITEMP TFA-100 are available in two different types as standard, M20 x 1.5 and 1/2" NPT.

	Cable entry	Plug
M20 x 1.5	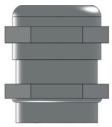	
1/2" NPT	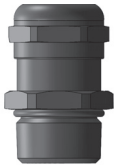	

Table 2-3: Examples of cable gland and plug

2.3.4 Types of temperature transmitters

Electrical temperature assemblies have just one, weak, interference-prone output signal. If this signal has to travel a great distance or if a standard signal of 4...20 mA is required, use of a temperature transmitter is recommended.

INFORMATION!
The manufacturer cannot make any general statement for the distance from which the use of a temperature transmitter is necessary as it depends on the specific interference associated with the installation site. The operator alone is responsible for this decision.

Head-mounted transmitters convert the temperature sensor's small signal into a standardised output signal of 4...20 mA, not susceptible to interference, or into a digital signal. The output signal depends on the type of temperature transmitter. The following 2-wire technology options are currently available:

- 4...20 mA
- 4...20 mA with HART®

Possibility of configure almost any temperature transmitter parameters using a PC and a computer program ConSoft or if transmitter is equipped with NFC technology, the app OPTICHECK Temperature Mobile for portable devices (smartphones) is a versatile and user-friendly tool for wireless configuration through NFC technology. For transmitter supporting HART®, there are also several drivers to be used together with HART®-models. Please find available transmitters on Krohne website.

INFORMATION!
Consult the relevant transmitter handbook for more detailed information on the temperature transmitters.

2.3.5 Display module

The display module is a loop powered digital display module for installation directly in a 4- 20 mA loop without need for external power supply. The display converts the 4-20 mA signal into a 4-digit value shown on the display were the range of the value can be set from -1999 to 9999. It's designed to be mounted in connection heads / instrument housings with window and in suitable enclosures for field / wall mounting, in an industrial environment. Delivers with a high-contrast, easy-to-read LCD display with white LED-backlight as standard.

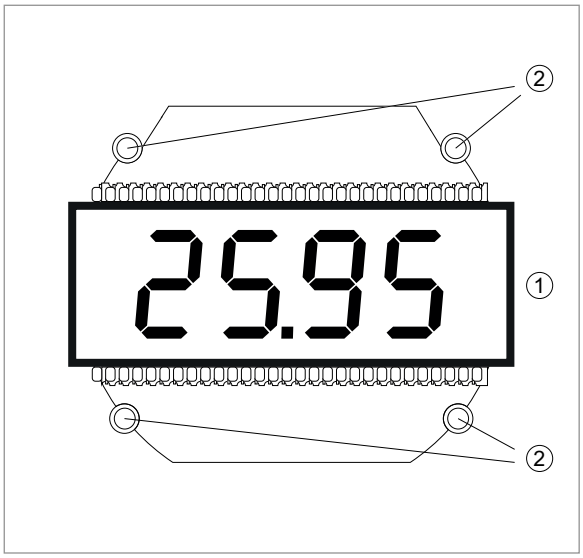

Figure 2-3: Front side of LCD-D100 display module

① LCD display
② Assembly holes

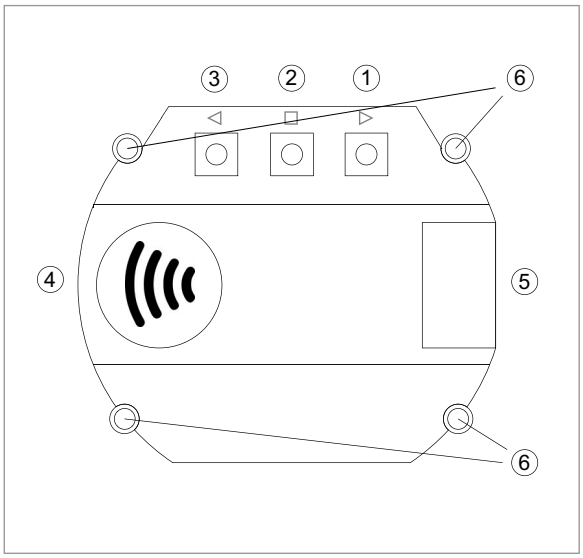

Figure 2-4: Back side of LCD-D100 display module

① Pushbutton with step (decrease) function
② Pushbutton with enter function
③ Pushbutton with step (increase) function
④ Location of NFC antenna
⑤ Connection terminals
⑥ Assembly holes

INFORMATION!
Consult the relevant display module OPTITEMP LCD-D100 handbook for more detailed information.

2.3.6 Pipe Clamp

OPTITEMP TFA-100 field housing is designed for wall or 1.5"...2" pipe clamp mounting. There are two size of the pipe clamp depending of field housing size.

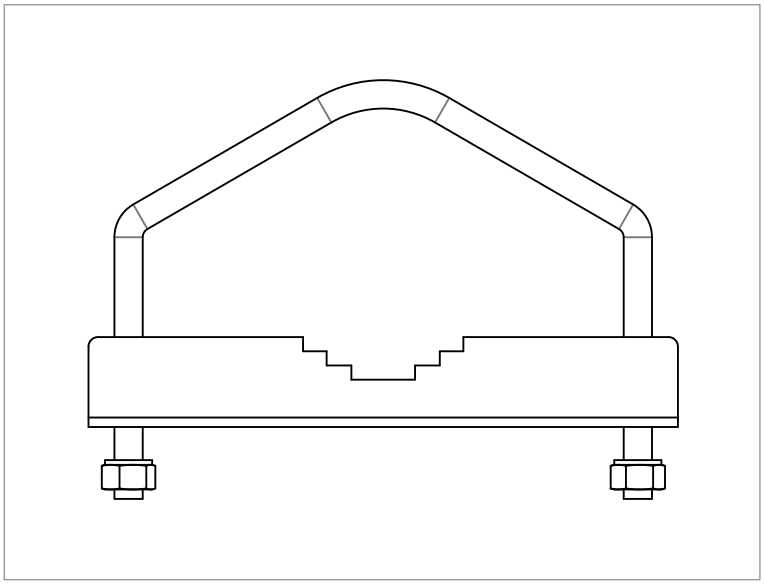

Figure 2-5: 1.5"...2" pipe clamp

2.4 Nameplate

INFORMATION!
Look at the device nameplate to ensure that the device is delivered according to your order.

The field indicator can be identified by the information on the nameplates.

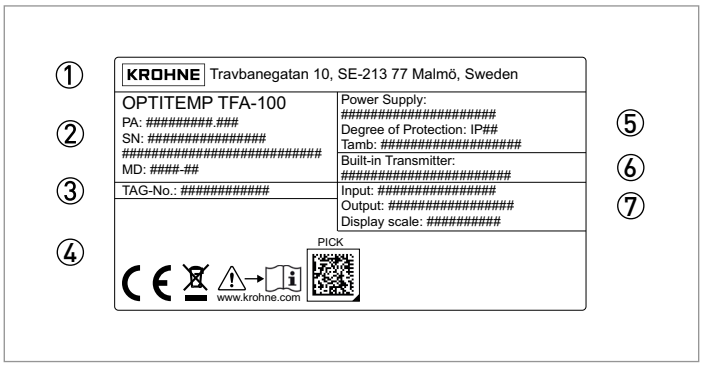

Figure 2-6: Example of nameplates for TFA-100

① Manufacturer name and address
② Product name, production order number (PA), serial number (SN), configuration code (VTI1) and manufacturing date (MD)
③ Tag number
④ Regulation symbols and Product Information Center KROHNE (PICK) DataMatrix code More information refer to *Product documentation and software* on page 10
⑤ Power supply, enclosure rating (IP), and ambient temperature range (Tamb)
⑥ Built-in transmitter (if applicable)
⑦ Input / output data and display scale

3.1 General notes on installation

CAUTION!
Installation, assembly, start-up and maintenance may only be performed by appropriately trained personnel. The regional occupational health and safety directives must always be observed.

INFORMATION!
Inspect the packaging carefully for damages or signs of rough handling. Report damage to the carrier and to the local office of the manufacturer.

INFORMATION!
Do a check of the packing list to make sure that you have all the elements given in the order.

INFORMATION!
Look at the device nameplate to ensure that the device is delivered according to your order.

INFORMATION!
Assembly materials and tools are not part of the delivery. Use the assembly materials and tools in compliance with the applicable occupational health and safety directives.

CAUTION!
Always note the following items to ensure a proper and safe installation:

- *Make sure that there is adequate space to the sides*
- *Device shall not be radiated heat (e.g. exposure to sun) housing surface temperature above maximum permissible ambient temperature. If it is necessary to prevent damage from heat source, a heat protection (e.g. sun shade) has to be installed.*
- *Do not exposure field indicator to intense vibration.*
- *Take the relevant IP classification of the enclosure into account (see manufactures plate). Even IP68 (NEMA 4X) enclosure should never be exposed to strong varying (weather) conditions.*
- *Cold surroundings or varying climatic conditions with high humidity (above 90% annual mean): take the necessary precautions against moisture by placing a dry sachet of silica gel, for example, inside the instrument case. Furthermore, it is required to replace or dry the silica gel periodically as advised by the silica gel supplier. For further information about the ambient temperature range refer to Technical data tables on page 34*

3.2 Storage

CAUTION!
Always store temperature field indicator in a dry place protected from dust.
The permissible range for storage temperatures is -40...+90°C / -40...+194°F.
Avoid continuous direct sunligth.

3.3 Transport

CAUTION!
Always transport temperature field indicator in their original packaging. Do not expose the devices to moisture or vibration during transport. The information that applies to storage also applies to transport.

3.4 Proper installation

CAUTION!
Take the following points into consideration prior to installing the temperature field indicator:
- *The dimensions of the field housing and accessor (size, diameter, type of material) comply with the requirements.*

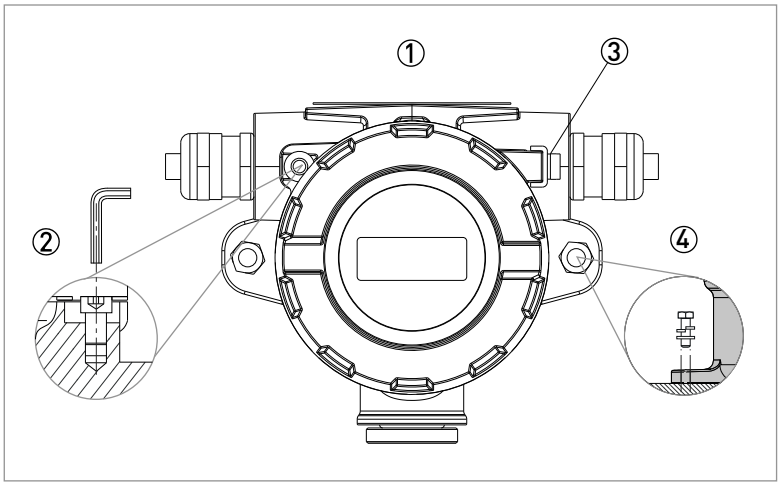

Figure 3-1: Wall mounted installation example with aluminium TFA-100

① TFA-100 (aluminium)
② Secure screw M5 preventing field housing cover to be open
③ Grounding terminal
④ Wall mounted details

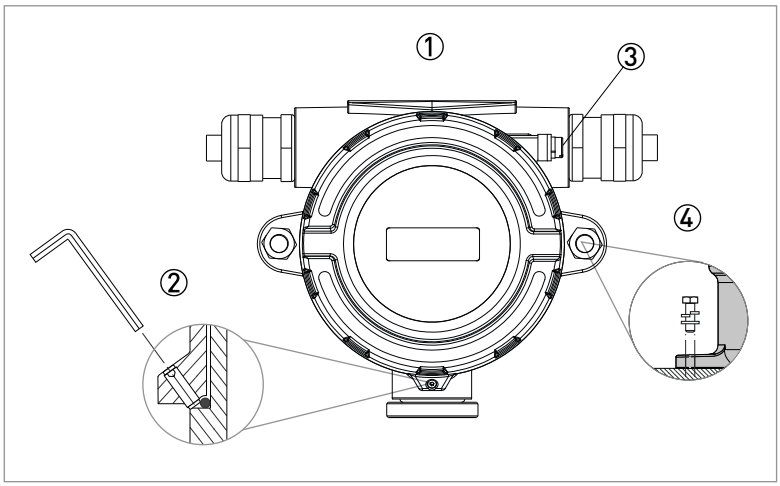

Figure 3-2: Wall mounted installation example with stainless steel TFA-100

① TFA-100 (stainless steel)
② Secure screw M4 preventing field housing cover to be open
③ Grounding terminal
④ Wall mounted details

For wall mounting its recommended to use Ø7 mm bolts together with suitable flat washer and a spring washer.

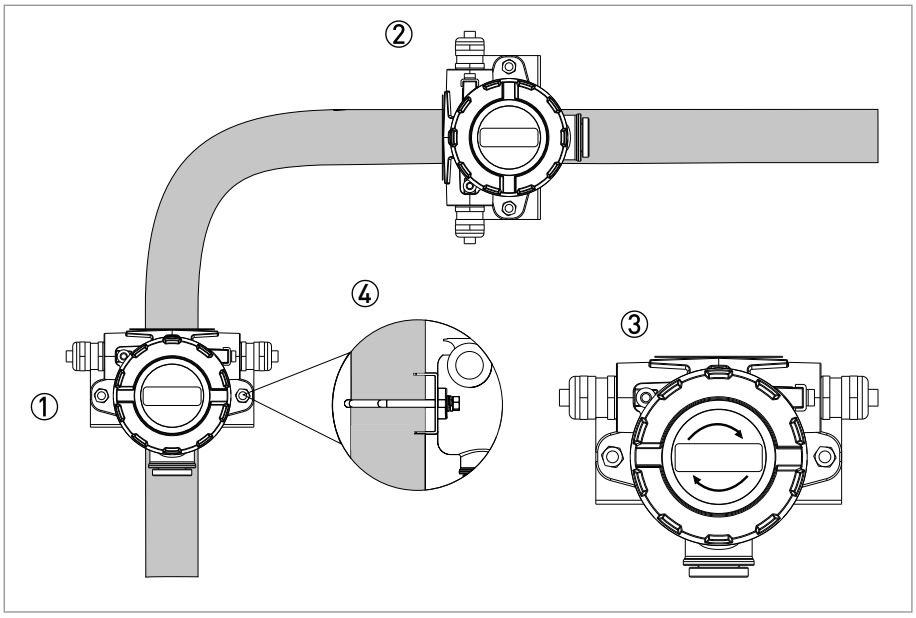

Figure 3-3: Pipe mounted installation example with 1.5"...2" pipe clamp

① Vertical installation
② Horizontal installation
③ The orientation of the window can be adjusted easily on site according to the requirement
④ Pipe mounted details

To install on a 1.5"...2" pipe use the 1.5"...2" clamp. Make sure it fits the field housing before installing. They are available in two sizes.

To rotate the indicator: Unscrew the field housing cover. Gently rotate the indicator module 90° to the left or right by hand and then screw back the cover on field housing.

WARNING!
If rotating the indicator more than 180° it can damage the electrical wiring. Do not use any tools to rotate the display, as this may damage the device.

3.5 Opening and closing field indicator

Procedure for opening and closing the field indicator for wiring or replacing parts

- Make sure the unit is clean and properly electrical grounded.
- Loosen the secure screw, holding the field housing cover in place, with a 4 mm hex spanner.
- Unscrew the housing cover by hand or with help of a rectangular bar in the slot of the cover. Be careful and do not scratch the display glass.
- Gently remove the display module together with adapters by gripping on the side and place it outside the housing.
- For connection of the cables, please first open up the cable gland and remove the dust protection. Then push the cable through and wire the sensor element refer to *Connection diagram* on page 23. Tighten the cable gland afterwards properly to ensure the IP classification of the unit.
- For replacement of the display module or transmitter, please consult separate handbooks about how to replace them. Make sure the new parts are correctly and properly installed and the cables are not twisted.

CAUTION!
Do not grip the display module and adapters with strong force or pull them hardly. It may damage cables and terminals between the display module and transmitter / connection terminals.

CAUTION!
No force on threads on field housing.

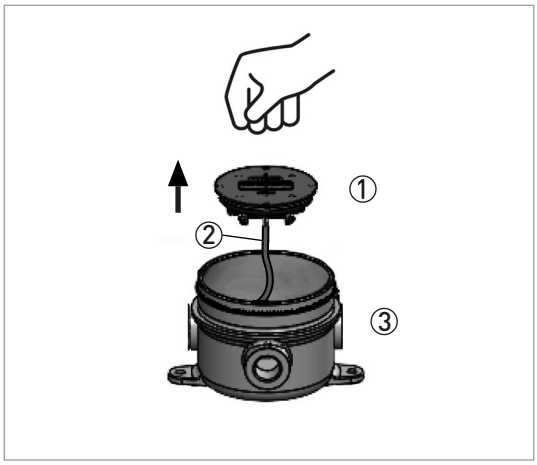

Figure 3-4: Schematic diagram for taking out the display module and adapters

① Display module and adapters
② Cable
③ Housing body

Procedures how to close the housing after wiring or replacement

- Place the display unit on top of the housing with the digits in the right direction. Make sure the wires are not twisted.
- Gently push the display unit into the housing until it snaps into place. Make sure that the display unit does not snap into place by pressing on the display module itself rather than on the edge of the display unit frame.
- Screw the housing cover back on by hand and secure its position with the secure screw by using a 4 mm hex spanner.

4.1 Safety instructions

DANGER!
All work on the electrical connections may only be carried out with the power disconnected. Take note of the voltage data on the nameplate!

DANGER!
Observe the national regulations for electrical installations!

WARNING!
Observe without fail the local occupational health and safety regulations.
Any work done on the electrical components of the measuring device may only be carried out by properly trained specialists.

INFORMATION!
Look at the device nameplate to ensure that the device is delivered according to your order.

4.2 Grounding

DANGER!
The field housing includes one inside and one outside earth terminal. Additional grounding can be added if it is required.

4.3 Ingress protection

The ingress protection (IP) of a temperature field indicator / field housing depends on the type of connection and the cable gland used. Up to IP68 can be ordered. Make sure the housing cover and cable glands are tighten correctly and right cables are used. The dust protection cap in the cable gland shall not be used to ensure a IP classification. The dust protection cap is purely a dust protection until the device is installed.

4.4 Power supply

INFORMATION!
Assembly materials and tools are not part of the delivery. Use the assembly materials and tools in compliance with the applicable occupational health and safety directives.

The only components of a temperature field indicator that require a power supply are the display module and / or any temperature transmitter used. For more detailed information on supplying these components with power, consult the product-specific manuals.

4.5 Connection diagram

Sensor connection for built-in transmitter

The input and output signals and the power supply must be connected in accordance with the following illustrations. To avoid measuring errors, all cables must be properly connected and the screws tightened correctly. Consult the relevant transmitter handbook for more detailed information on the temperature transmitters.

	OPTITEMP TT 33 C / TT 53 C	OPTITEMP TT 51 C
RTD **2-wire connection**	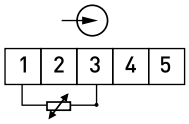	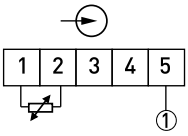
RTD 3-wire connection	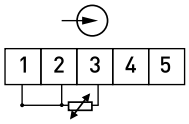	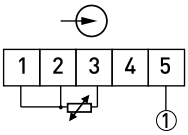
RTD 4-wire connection	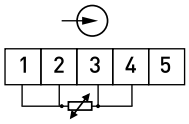	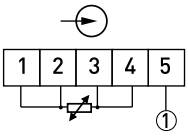
Thermocouple	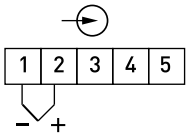	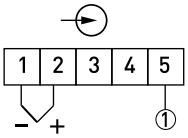

Table 4-1: Example for sensor connections

① Optional low sensor isolation detection lead (SmartSense)

Connection diagram with / without transmitter and display module

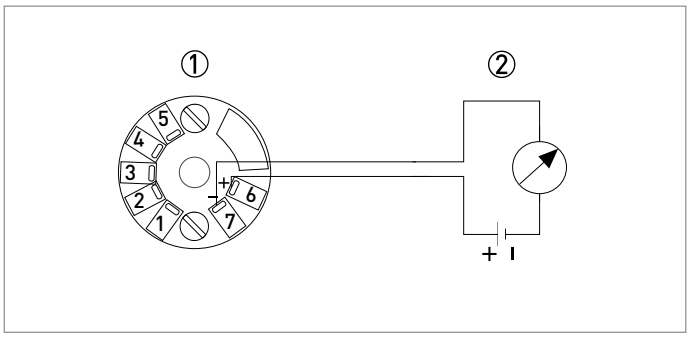

Figure 4-1: TFA-100 connection diagram with in-head 2-wire transmitter

① Transmitter
② Power supply (14.5...30 VDC, 22 mA)

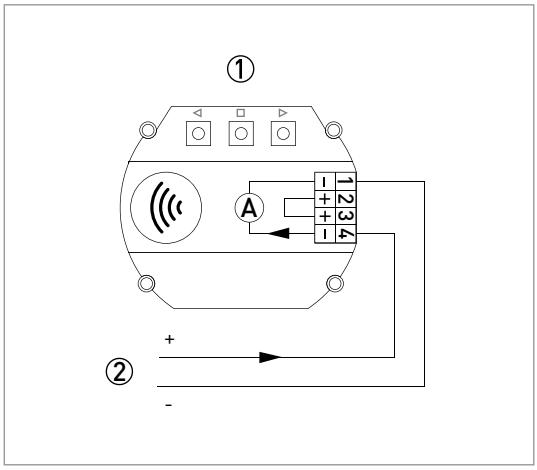

Figure 4-2: TFA-100 connection diagram with display module

① Display module
② Loop power

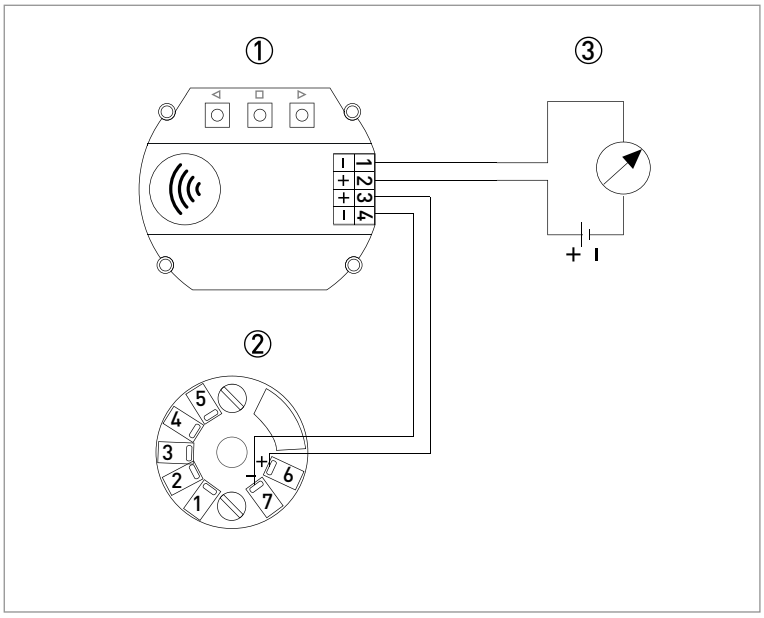

Figure 4-3: TFA-100 connection diagram with in-head 2-wire transmitter and display module LCD-D100

① Display module LCD-D100
② Transmitter
③ Power supply (14.5...30 VDC, 22 mA)

5.1 Start-up

CAUTION!
Double check the following points prior to starting up a temperature field indicator in order to avoid measuring errors as well as damage to or the destruction of the temperature field indicator:

- *Ensure that the temperature field indicator has been properly installed according to the manufacturer's instructions.*
- *Ensure that the display module and temperature transmitter have been properly electrically connected according to the manufacturer's instructions (Consult the handbook for the temperature transmitter and display module.).*

If the housing is equipped with an indicator the display will flash the indicators id TAG number three times before going into normal display mode.

5.2 Normal operation

During the course of normal operation, it is not necessary to make any adjustments to the field housing, temperature transmitter or temperature indicator.

CAUTION!
Thread surface should be free of any grains, pellets and other impurity, which cause seizing, and thread could be damaged. Never screw on the cover forcefully!

WARNING!
A circuit breakers or contactors containing oil filling are not allowed to be installed inside of the empty enclosure.

DANGER!
The empty enclosure shall be installed to avoid a risk from propagating brush discharges for application in explosive dust atmosphere.

For more operation instructions for temperature transmitter and temperature display module please associate with handbooks separately.

6.1 Replacing the electronics

When it comes to temperature field indicator, it is only possible to replace an electronic component if there is a temperature transmitter or, if applicable, a head-mounted display module. Consult the handbook for the temperature transmitter or, if applicable, the head-mounted display module to learn what you need to take into consideration when replacing the electronics.

Please find more information about replacement procedures on page 21

6.2 Cleaning and maintenance

As a rule, the temperature field indicators require no cleaning or maintenance. However, depending on the conditions of use, the temperature transmitter and display module may be aged and need to be replaced.

CAUTION!
In case the window of temperature field indicators need to be cleaned, it is recommended to remove the device out from the pipeline before cleaning. New gaskets recommended to be used when the field housing cover is re-installing after opening. Avoid electrostatic charges when cleaning the surfaces (e.g. sight window).

The manufacture recommend the following maintenance measures:

- Check the housing for corrosion and/or damage
- Check the entire device for dust deposit
- Check the input/output wiring for reliability and aging problem
- Check the process accuracy
- Clean the casing with soapy-water. Do not use aggressive solvents as they might damage the coating and gaskets.

For calibration / recalibration of sensors and temperature transmitters, please contact the manufacturer for more information.

6.3 Spare parts availability

The manufacturer adheres to the basic principle that functionally adequate spare parts for each device or each important accessory part will be kept available for a period of 3 years after delivery of the last production run for the device.

This regulation only applies to spare parts which are subject to wear and tear under normal operating conditions.

6.4 Availability of services

The manufacturer offers a range of services to support the customer after expiration of the warranty. These include repair, maintenance, technical support and training.

INFORMATION!
For more precise information, please contact your local sales office.

6.5 Troubleshooting

- Display don't power up or no signal out from transmitter. Check wiring connection.
- Show max or min error on the indicator or error signal from the transmitter. Check sensor element and wiring connection.
- Show wrong value on the indicator or out from transmitter. Check respective handbook for indicator or transmitter.
- Ensure the total load on the loop is not exceeded to the limitation of the power requirement refer to *Technical data tables* on page 34.
- Ghosting digits effect were ambient temperature is minus degrees. See display module OPTITEMP LCD-D100 handbook how to slow down the display update interval.

6.6 Returning the device to the manufacturer

6.6.1 General information

This device has been carefully manufactured and tested. If installed and operated in accordance with these operating instructions, it will rarely present any problems.

WARNING!
Should you nevertheless need to return a device for inspection or repair, please pay strict attention to the following points:

- *Due to statutory regulations on environmental protection and safeguarding the health and safety of the personnel, the manufacturer may only handle, test and repair returned devices that have been in contact with products without risk to personnel and environment.*
- *This means that the manufacturer can only service this device if it is accompanied by the following certificate (see next section) confirming that the device is safe to handle.*

WARNING!
If the device has been operated with toxic, caustic, radioactive, flammable or water-endangering products, you are kindly requested:

- *to check and ensure, if necessary by rinsing or neutralising, that all cavities are free from such dangerous substances,*
- *to enclose a certificate with the device confirming that it is safe to handle and stating the product used.*

6.6.2 Form (for copying) to accompany a returned device

CAUTION!
To avoid any risk for our service personnel, this form has to be accessible from outside of the packaging with the returned device.

Company:		Address:
Department:		Name:
Telephone number: Fax number:		Email address:
Manufacturer order number or serial number:		
The device has been operated with the following medium:		
This medium is:		radioactive
		water-hazardous (Biological risks etc...)
		toxic
		caustic, acid, corrosive, reactive etc...
		flammable
		We checked that all cavities in the device are free from such substances.
		We have flushed out and neutralized all cavities in the device.
We hereby confirm that there is no risk to persons or the environment caused by any residual media contained in this device when it is returned.		
Date:		Signature:
Stamp:		

6.7 Disposal

LEGAL NOTICE!
Disposal must be carried out in accordance with legislation applicable in your country.

Separate collection of WEEE (Waste Electrical and Electronic Equipment):

According to the directive 2012/19/EU or UK Regulation 2013 No. 3113, the monitoring and control instruments marked with the WEEE symbol and reaching their end-of-life **must not be disposed of with other waste**.
The user must dispose of the WEEE to a designated collection point for the recycling of WEEE or send them back to our local organisation or authorised representative.

6.8 Disassembly and recycling of the field indicator / field housing

INFORMATION!
Disassembly and recycling of the display module OPTITEMP LCD-D100 and the transmitter please consult product related manual / handbook accordingly.

Type	OPTITEMP	
Model	TFA-100 housing	
	Weight [g]	Weight [lb]
Total	723...2804	1.594...6.182
Metal parts	721...2558	1.590...5.639
Glass	0...241	0...0.531
Silicone	2...4.5	0.004...0.010

Table 6-1: Total weight of TFA-100 housing refer to the table "Parts and weight for TFA-100" below

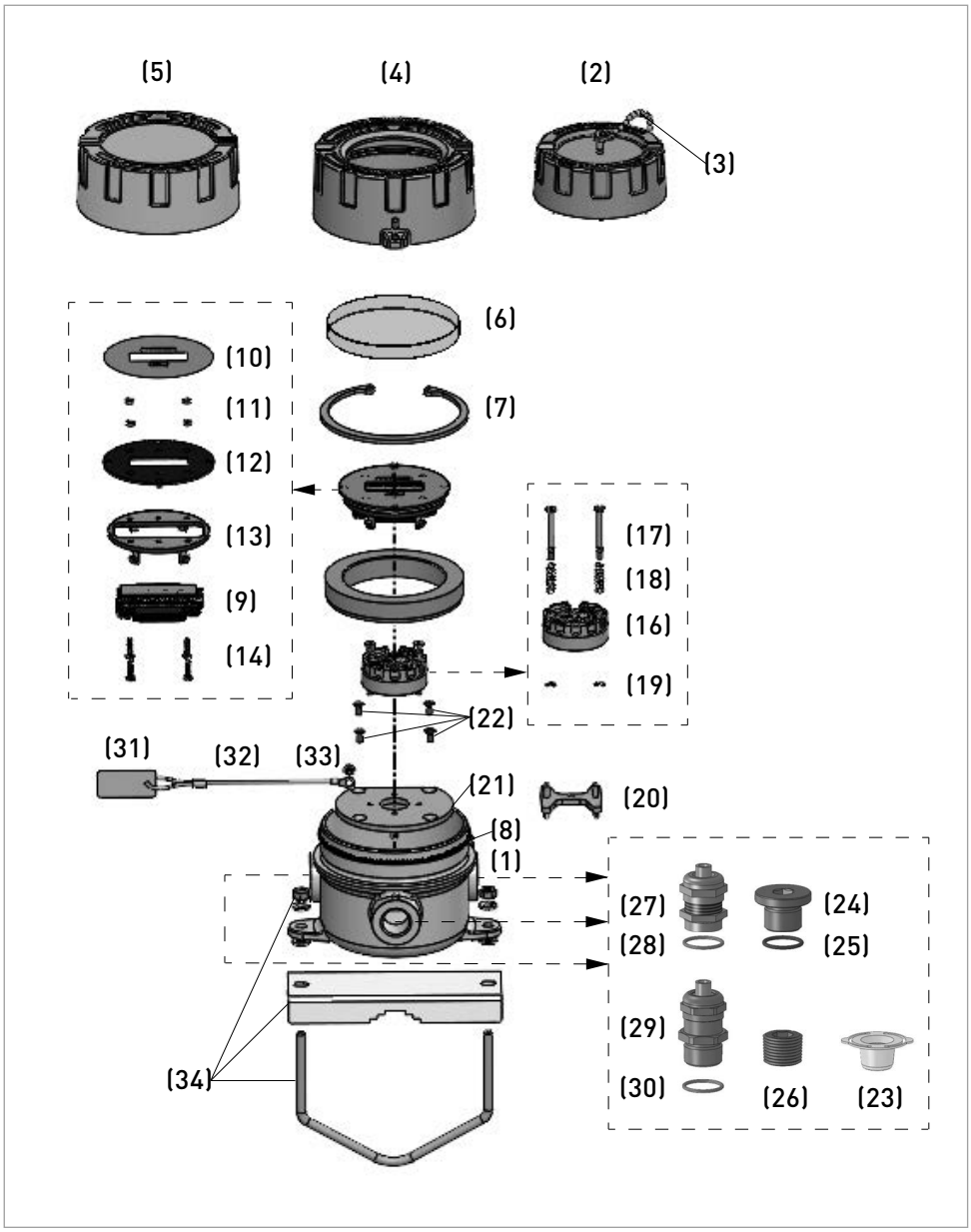

Figure 6-1: Disassembly pars of TFA-100

The content of the TFA-100 can be found in the following table. The actual weight for the product depends on selected TFA-100 type, transmitter type and accessories.

Item	Part	Material	Description	Weight	
				[g]	[lb]
1	Housing and housing support	Aluminium	Housing body	723.00...2803.50	1.594...6.181
1		Aluminium	Housing body		
1		Stainless steel	Housing body		
1		Stainless steel	Housing body		
2		Aluminium	Housing cover		
4		Aluminium	Housing cover		
5		Stainless steel	Housing cover		
4		Stainless steel	Housing cover		
6		Glass	Window glass		
6		Glass	Window glass		
7		Steel	Window glass locking (aluminium housing)		
7		Steel	Window glass locking (stainless steel housing)		
3		Stainless steel	Housing screw and chain for aluminium housing without window		
1		Stainless steel	Secure screw (aluminium housing)		
1		Stainless steel	Secure screw (stainless steel housing)		
1		Stainless steel	Grounding terminal		
1		Stainless steel	Protection terminal		
8		Silicone	Gasket		
8		Silicone	Gasket		
9	Display module	Refer to display moduel LCD-D100 manual	Display module	51.70	0.114
10	Display module support	Polyethylene	Display module label	30.78...95.96	0.068...0.212
11		Thermoplastic epoxy resin + steel	Display module adaper 1		
12		Thermoplastic epoxy resin + steel	Display module adaper 2		
13		Nylon	Display module mounting screw		
14		Nylon	Display module mounting gasket		
15		Thermoplastic	Display module adaper 3		
16	Transmitter	Refer to transmitter manual	Transmitter	35.20...50.00	0.078...0.110

17	Transmitter support	Steel	Transmitter mounting screw	9.45...138.93	0.021...0.306
18		Steel	Transmitter mounting spring type 1		
18		Steel	Transmitter mounting spring type 2		
19		Steel	Transmitter mounting gasket		
20		Thermoplastic	Transmitter adapter type 1		
21		Stainless steel	Transmitter adapter type 2		
22		Steel	Screw of Transmitter adapter type 2		
23	Plug	Thermoplastic PA (Polyamide)	Plug (universal)	1.70...52.60	0.004...0.116
24		Stainless steel	Plug (M20)		
25		Silicone	Gasket for plug (M20)		
26		Stainless steel	Plug (1/2" NPT)		
27	Cable gland (M20)	Thermoplastic PA (Polyamide)	Cable gland clamping insert (M20)	29.20	0.064
27		Elastomer	Cable gland plug (M20)		
27		Nickel plated brass	Cable gland metal parts (M20)		
28		Silicone	Cable gland gasket (M20)		
29	Cable gland (1/2" NPT)	Thermoplastic PA (Polyamide)	Cable gland clamping insert (1/2" NPT)	40.94	0.090
29		Elastomer	Cable gland plug (1/2" NPT)		
29		Nickel plated brass	Cable gland metal parts (1/2" NPT)		
30		Silicone	Cable gland gasket (1/2" NPT)		
31	Tag plate and tag plate support	Stainless steel	Tag plate	6.69...7.67	0.015...0.017
32		Stainless steel + silicone	Wire for tag plate		
33		Stainless steel	Screw for tag plate		
34	Pipe clamp	Stainless steel	1.5"...2" Pipe clamp type small	213.00...240.00	0.470...0.529
		Stainless steel	1.5"...2" Pipe clamp type large		

Table 6-2: Parts and weight for TFA-100

7.1 Technical data tables

INFORMATION!

- *The following data is provided for general applications. If you require data that is more relevant to your specific application, please contact us or your local sales office.*
- *Additional information (certificates, special tools, software,...) and complete product documentation can be downloaded free of charge from the website (Downloadcenter).*

Design

Type	Field housing with/without windows
Material	Aluminium or stainless steel with/without glass window
Mounting	Wall mounted 2 x Ø7 mm hole or 1.5"...2" pipe clamp
Dimension	For detailed information refer to *Dimensions* on page 37
Weight	723...2804 g depending on configuration
Protective Category	Max. possible to achieve IP68 (withstand complete submersion in water beyond one meter and 60 minutes) depending on applied cable gland and plug
Cable entry	3 x M20 x 1.5 or 3 x 1/2" NPT, Ø6...Ø12 mm
Converters	OPTITEMP TT 33 C, TT 53 C or TT 51 C (SIL2)
Indicator	OPTITEMP LCD-D100
Accessories	Cable gland, stop plug, TAG plate and 1.5"...2" pipe clamp

Features

HART Compliance	LCD-D100: HART transparent TT 53 C: HART 7 TT 51 C: HART 6
Indicator LCD-D100	Set range, decimal, filter, TAG, NFC off, input calibration, etc. More details for indicator LCD-D100 please consult the product-specific manuals.
Display units	C°, F°, mA, mV, V, bar, mbar, Pa, kPa, pH, %, s, ms, µs, mm, cm, m
Transmitter TT 33 C, TT 53 C, TT 51 C	Range, sensor type, wiring, filter, output, erro correction, customized linearization, monitoring, service mode, configuration counter, runtime watch, peak detectors, etc. More details for transmitter TT 33 C, TT 53 C, TT 51 C please consult the product-specific manuals.

Configuration

LCD-D100	3 pushbuttons on backside of display unit
TT 33 C, TT 51 C and TT 53 C	PC configuration kit TT-CON Ex via software ConSoft
LCD-D100, TT 33 C and TT 53 C	NFC via the app OPTICHECK Temperature Mobile
TT 53 C and TT 51 C	HART® protocol via HART® communication tools

Operating temperature

Operational	-40°C...+85°C depending on configuration, see handbook for the selected parts
Humidity	0...95% RH (non-condensing)

Power requirements

Power requirements	Input loop powered from 4-20mA signal input
Max power supply	Transmitters: 36 V
Voltage drop	4.5...14.5V depending on configuration, see handbook for the selected parts
Galvanic isolation	TT 33 C, TT 53 C and TT 51 C: 1500VAC, 1 minute

Terminal connection

Signal Type	Single standard wire: max 0.2...1.5 mm² / AWG 24...16
Grounding type	Internal single standard wire max 2.5 mm² / AWG 14
	External singel standard wire max 6.0 mm² / AWG 10

Data protection

Password	Configuration settings can be password protective
NFC switch off	NFC can be switched of on LCD-D100
Configuration verification	Configuration counted up for every configuration

Input

Indicator	4...20 mA, more details for indicator LCD-D100 please consult the product-specific manuals
Transmitter:	TT 33 C, TT 53 C, TT 51 C
	RTD: Pt10...Pt1000, Ni100, Ni120, Ni1000, Cu10
	TC: B, C, D, E, J, K, N, R, S, T
	Res: TT 33 C, TT 53 C: 0...10000Ω TT 51 C: 0...4000Ω
	Pot: TT 33 C, TT 53 C: 100...10000Ω TT 51 C: 100...4000Ω
	Voltage: -10...1000mV
	TT 51 C: 2 x RTD, 2 x TC, RTD + TC
Cold Junction compensation	TT 33 C, TT 53 C, TT 51 C: CJC internal (Pt100), external or fixed

Output

Output signal	4...20 mA
NAMUR compliances	Output limits and failure currents acc. to NAMUR NE 43
Typical Accuracy	
LCD-D100	±0.05% of span ±1 digit
TT 33 C and TT 53 C	±0.08% of span ±0.08°C, Pt100 4-wire
TT 51 C	±0.05% of span or ±0.1°C, Pt100 4-wire

Approvals

CE	The device fulfils the statutory requirements of the EU directives. The manufacturer certifies that these requirements have been met by applying the CE-Marking.
Radio Equipment Directive	EN 300 330
	EN 61326-1 EN 61326-2-3 EN 61000-6-2 EN 61000-6-4
	EN 61010-1
RoHS	Directive: 2011/65/EU and (EU) 2015/863
	Harmonized standards: EN IEC 63000
Vibration resistance	According to IEC 60068-2-6, test Fc 10...2000 Hz. 10 g
Shock resistance	According to IEC60721-4-4 Class 4M4 with method IEC 60068-2-27, 15 g / 6 ms
Namur Compliance	NE21, NE42, NE53, depending on the configuration, see handbook for the selected parts

Functional safe	TT 51 C, acc. to IEC 61508-1-3, SIL 2, SP SC0267,3
UV resistance	According to ISO9370
Ozone resistance	According to ISO1431-1 (2022-06) and ASTM D 1171-18 (2018)
Biological resistance	According to IEC 60721-3-4, class 4B2

Table 7-1: Technical data tables for OPTITEMP TFA-100

7.2 Dimensions

7.2.1 Field housing

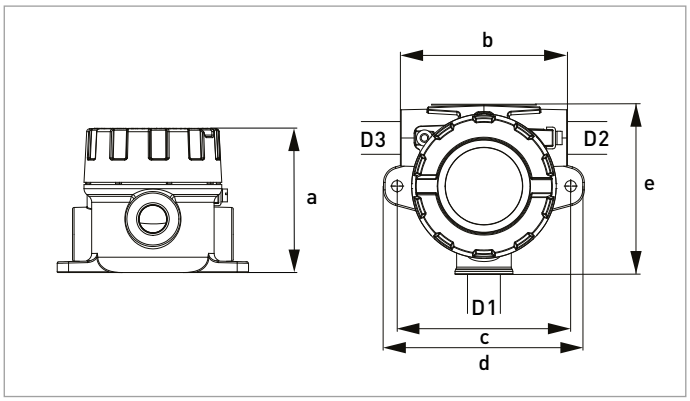

Figure 7-1: Aluminium field housing TFA-100 without window

	Dimensions (Aluminium TFA-100 without window)	
	[mm]	[inch]
a	94.5	3.72
b	104	4.09
c	108	4.25
d	125	4.92
e	105.5	4.15
D1, D2, D3	M20 x 1.5 or 1/2" NPT	

Table 7-2: Dimensions for aluminium TFA-100 without window

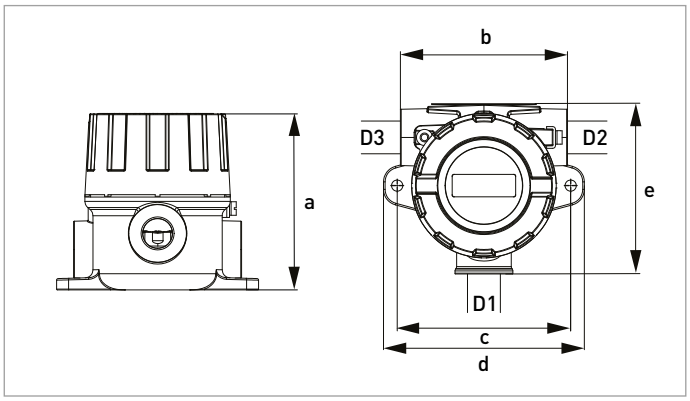

Figure 7-2: Aluminium field housing TFA-100 with window

	Dimensions (Aluminium TFA-100 with window)	
	[mm]	[inch]
a	110	4.33
b	104	4.09
c	108	4.25
d	125	4.92
e	105.5	4.15
D1, D2, D3	M20 x 1.5 or 1/2" NPT	

Table 7-3: Dimensions for aluminium TFA-100 with window

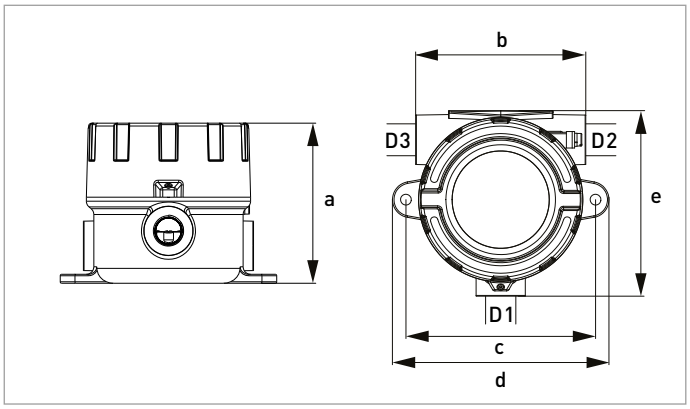

Figure 7-3: Stainless steel field housing TFA-100 without window

	Dimensions (Stainless steel TFA-100 without window)	
	[mm]	[inch]
a	107	4.21
b	114	4.49
c	127	5.00
d	145	5.71
e	124	4.88
D1, D2, D3	M20 x 1.5 or 1/2" NPT	

Table 7-4: Dimensions for stainless steel TFA-100 without window

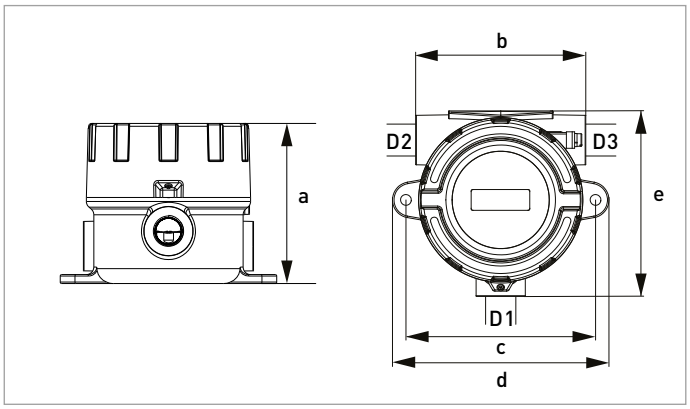

Figure 7-4: Stainless steel field housing TFA-100 with window

	Dimensions (Stainless steel TFA-100 with window)	
	[mm]	[inch]
a	107	4.21
b	114	4.49
c	127	5.00
d	145	5.71
e	124	4.88
D1, D2, D3	M20 x 1.5 or 1/2" NPT	

Table 7-5: Dimensions for stainless steel TFA-100 with window

7.2.2 Accessories

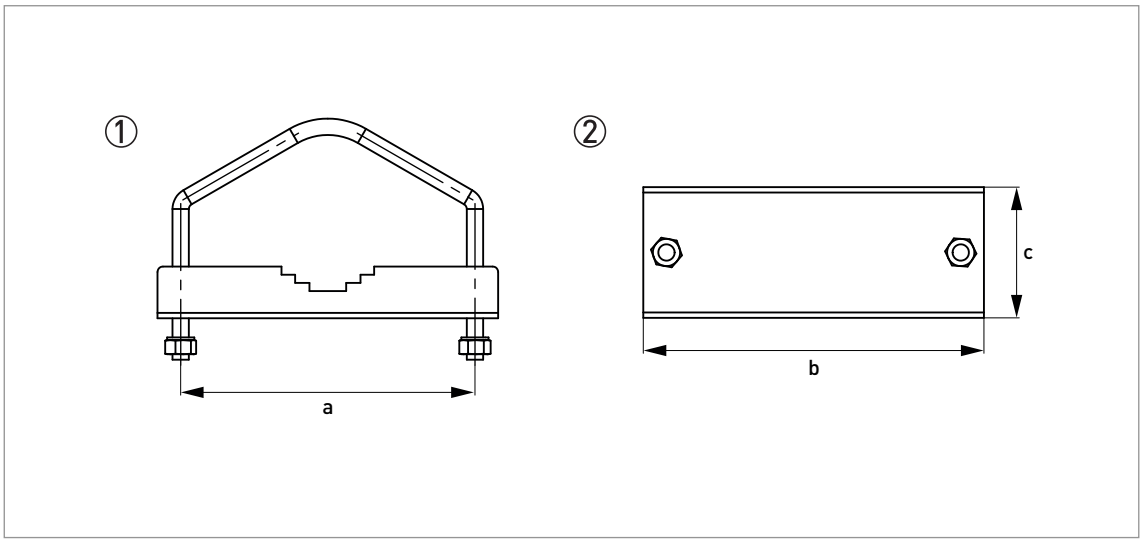

Figure 7-5: 1.5"...2" pipe clamp

1. Side view of the 1.5"...2" pipe clamp
2. Bottom view of the 1.5"...2" pipe clamp

	Dimensions (1.5"...2" pipe clamp for aluminium field indicator)	
	[mm]	[inch]
a	108	4.25
b	125	4.92
c	48	1.89

Table 7-6: Dimensions in mm and inch

	Dimensions (1.5"...2" pipe clamp for stainless steel field indicator)	
	[mm]	[inch]
a	127	5.00
b	145	5.71
c	48	1.89

Table 7-7: Dimensions in mm and inch

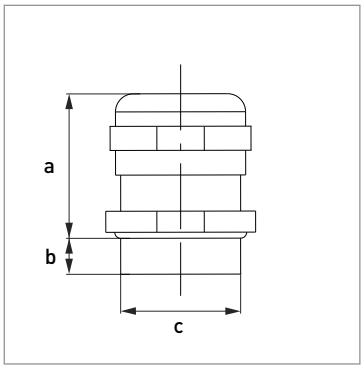

Figure 7-6: Cable gland in M20

	Dimensions (cable gland in M20)	
	[mm]	[inch]
a	23	0.91
b	6	0.24
c	M20 x 1.5	

Table 7-8: Dimensions in mm and inch

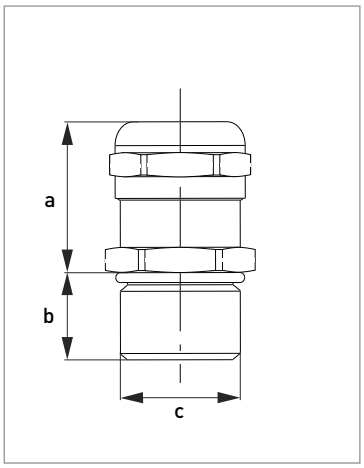

Figure 7-7: Cable gland in 1/2" NPT

	Dimensions (cable gland in 1/2" NPT)	
	[mm]	[inch]
a	24	0.95
b	13	0.51
c	1/2" NPT	

Table 7-9: Dimensions in mm and inch

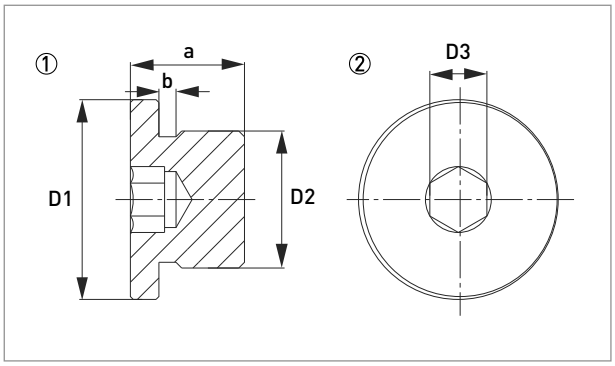

Figure 7-8: Plug in M20

1. Side view of the plug in M20
2. Top view of the plug in M20

	Dimensions (plug in M20)	
	[mm]	[inch]
a	20	0.79
b	3	0.12
D1	30	1.18
D2	M20 x 1.5	
D3	10	0.39

Table 7-10: Dimensions in mm and inch

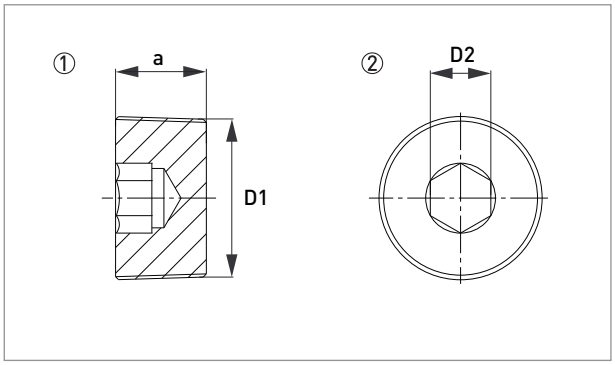

Figure 7-9: Plug in 1/2" NPT

1. Side view of the plug in 1/2" NPT
2. Top view of the plug in 1/2" NPT

	Dimensions (plug in 1/2" NPT)	
	[mm]	[inch]
a	15	0.59
D1	1/2" NPT	
D2	10	0.39

Table 7-11: Dimensions in mm and inch

KROHNE – Products, Solutions and Services

- Process instrumentation for flow, level, temperature, pressure measurement and process analytics
- Flow metering, monitoring, wireless and remote metering solutions
- Engineering, commissioning, calibration, maintenance and training services

Head Office KROHNE Messtechnik GmbH
Ludwig-Krohne-Str. 5
47058 Duisburg (Germany)
Tel.: +49 203 301 0
Fax: +49 203 301 10389
info@krohne.de

The current list of all KROHNE contacts and addresses can be found at:
www.krohne.com

© KROHNE 03/2024 - 4010168001 - MA OPTITEMP TFA-100 R01 en - Subject to change without notice.